Pladdet

USERMANUAL

Demolition and Sorting grapple PRG2-150

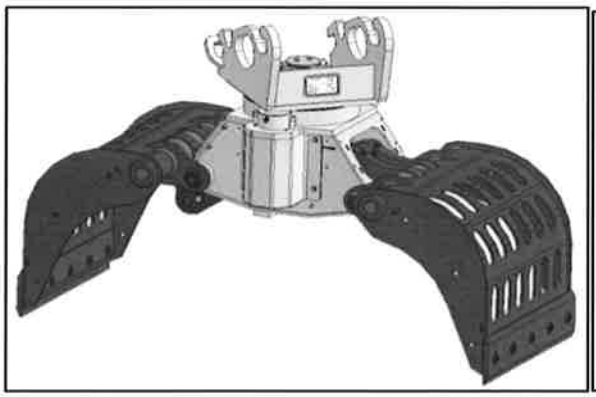

Rotating version with
CW connection

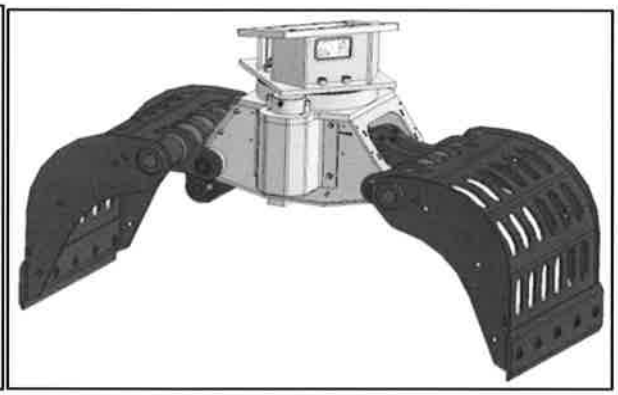

Rotating version with
Export adapter

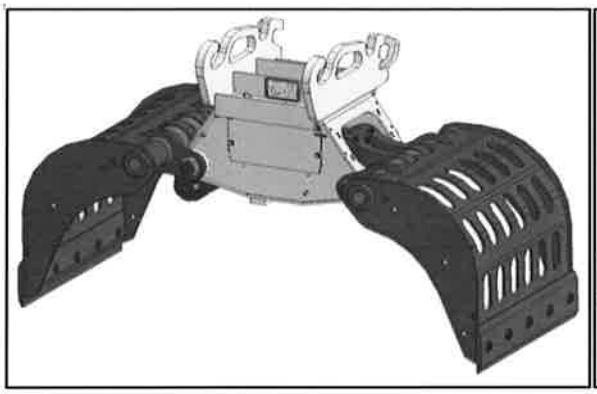

Fixed version with
CW connection

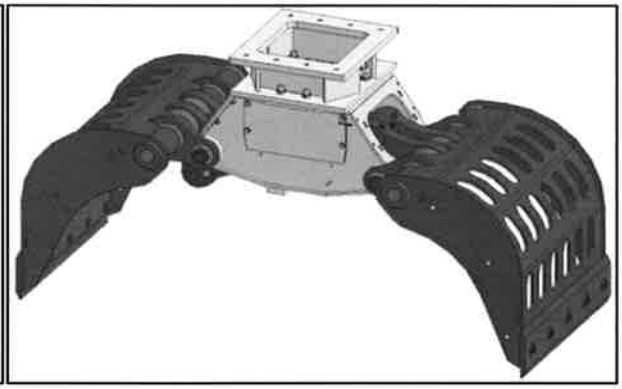

Fixed version with
Export connection

Pladdet Attachments
Paulinaweg 6-10
4521RE Biervliet

Contents

1	CE Mark type plate	3
2	Technical specifications	4
3	EG Declaration of conformity	4
4	Product description and purpose	5
5	Safety aspects and features	6
5.1	Safety symbols used in the manual	6
5.2	General safety instructions	7
5.3	Other risks	8
5.4	Safety features on the machine	9
6	Transport	10
7	Operation	11
8	Cleaning, maintenance and repairs	13
8.1	Cleaning	13
8.2	Daily maintenance	14
8.3	Expert maintenance and repairs	17
Appendix 1: Overview drawing		18
Appendix 2: Exploded view and parts list		19
Appendix 3: Hydraulics diagram		21
Appendix 4: Upper plate Export adapter		23

1 CE Mark type plate

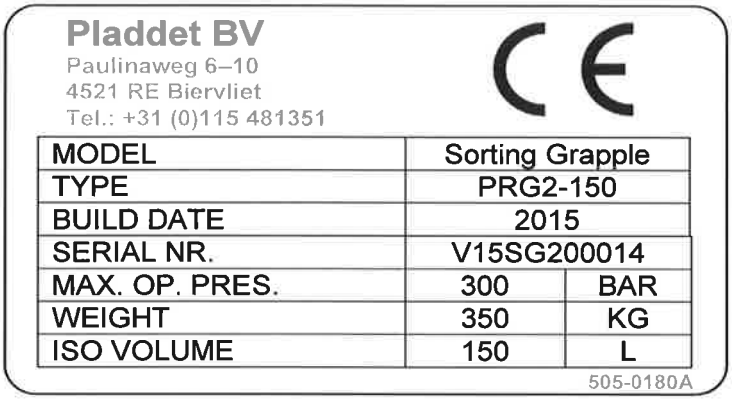

Pladdet BV
Paulinaweg 6–10
4521 RE Biervliet
Tel.: +31 (0)115 481351

CE

MODEL	Sorting Grapple	
TYPE	PRG2-150	
BUILD DATE	2015	
SERIAL NR.	V15SG200014	
MAX. OP. PRES.	300	BAR
WEIGHT	350	KG
ISO VOLUME	150	L

505-0180A

Diagram 1: CE type plate sorting grapple

The production year is the year in which the production process was completed and is the same as the year in which the machine was delivered.

Missing information in diagram, indicated with dots, can be obtained from the table on the next page or read off the machine itself. The shell width and ability of the grapple to rotate or not enables you to ascertain which grapple is involved.

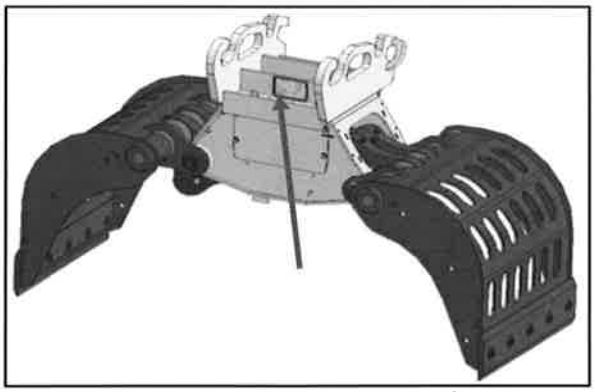

Diagram 2: Position CE type plate on fixed grapple

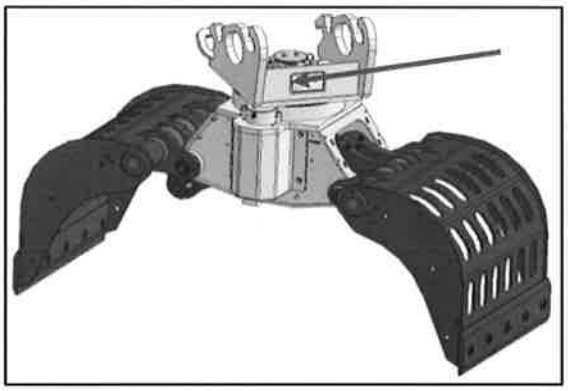

Diagram 3: Position CE type plate on rotating grapple with CW connection

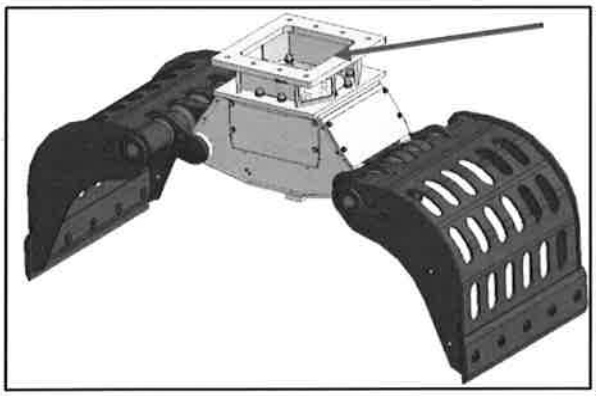

Diagram 4: Position CE type plate on rotating grapple with Export adapter

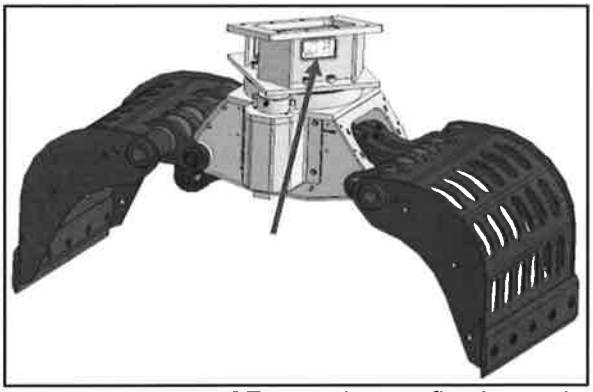

Diagram 5: Position CE type plate on fixed grapple with Export adapter

2 Technical specifications

Demolition and sorting grapple group 2		
Type	PG2	PRG2
Machine connection	CW10 / Export adapter	
Machine class [t]	4-9	
Max. Operating pressure opening/closing [bar]	300	
Max. Oil flow opening/closing [L/min]	40	
Max. Operating pressure rotating [bar]	nvt	150
Max. Oil flow rotating [L/min]	nvt	15
Height opened [mm]	830	1000
Spread opened [mm]	1500	
Closing force between blades [kN]	24	
Sound pressure level [dB(A)]	< 70	

The table above includes all standard variants that are available for this grapple. The type indication is laid out as follows:

PRG:	2:	-150
Pladdet Rotating Grab	Product group	Volume of the grab

3 EG Declaration of conformity

Manufacturer: Pladdet BV
Address: Paulinaweg 6–10
4521 RE Biervliet
The Netherlands

declares that the product specified under 'Technical Specifications' conforms to all applicable provisions of the Machinery Directive (2006/42/EC).

The validity of this declaration is invalid if the machine is modified in any way not approved by our company.

Technical file held at:
Pladdet BV
Paulinaweg 6–10
4521 RE Biervliet
The Netherlands

Gerrit Cazant

Managing Director, Pladdet BV

Biervliet,
17-03-2015

4 Product description and purpose

The demolition and sorting grapple is a connectable attachment for excavators. The sorting grapple is intended for the gripping, lifting and movement of material. This grapple is produced in a rotating or fixed version, and its robust construction and reliability means that it can be used for demolition work. It can also be used in many other sectors, such as recycling, hydraulic engineering, forestry, industry, etc.

The grapple consist of a sub-frame on which the hinged grapple boxes are hung. The sub-frame houses the drive unit of the boxes in the form of a cylinder and a connecting rod. In the fixed version, the sub-frame is connected directly to the top frame, which is fitted with the coupling plates for connection to the excavator. A universal slew bearing is fitted between these two in the rotating version. The top frame also contains rotation motors and houses an oil feed-through spindle. The oil feed-through spindle continuously transmits the oil flow to the cylinder in the infinitely rotatable sub-frame.

The grapple may only be used on a machine with the correct weight. Refer to the technical specifications in this manual or the machine class on the type plate of the machine.

5 Safety aspects and features

This chapter explains the safety symbols that are used in this manual. It also specifies the general safety instructions and the remaining risks that are associated with this machine.

5.1 Safety symbols used in the manual

Follow the safety guidelines in this manual. They are always stated before the relevant action, thereby providing you with a timely warning. Here are the symbols used and their explanations:

Warning!
Indicates situations that may cause (potentially fatal) hazards for peoples, damage to the machine and/or the immediate vicinity or financial loss.

Attention!
Important instruction that must always be followed.

Environmental recommendation!
Recommendation to reduce the environmental burden and/or stimulate recycling.

5.2 General safety instructions

Warning!
Read this manually carefully before using, adjusting or executing maintenance on the machine. The machine may only be used by authorised persons who are completely familiar with the operation and control of the machine and the risks that are involved.

Warning!
Always follow the safety regulations and instructions when using the sorting grapple:
- specified in this manual
- indicated by the manufacturer of your excavator
- applicable for the environment in which the machine is used
- imposed by the government (statutory)

- Store this user's manual with care in an appropriate place, and ensure that all users have access to this manual.
- The grapple may only be used on a machine with the correct weight. For this, refer to the technical specifications in this manual or the machine class on the type plate of the machine.
- If in doubt, consult a professional.
- The (safety) features and equipment of the excavator are not covered in this manual. In general, it can be said that it must be in a good state of maintenance and it must be possible to use it safely. We recommend installing filters in front of the quick-lock coupling at the end of the boom.
- Never use the machine if your concentration is reduced by illness, excessive tiredness, alcohol or medicines.
- The set-up of the machine may not be changed and the machine may not be used for purposes other than that for which it was intended. See also chapter 4.
- Repairs faults immediately if they could potentially cause hazards.
- Prevent unsafe work situations and keep a safe distance from moving parts.
- Never leave the machine switched on without supervision and only leave the machine when all parts are at a completly standstill.
- Always ensure that no parts are damaged before switching on the machine. Replace every damaged part that may cause a hazard immediately! See also chapter 8.
- Avoid every form of machine overload!
- Refer to the rest of this manual for all other warnings.

5.3 Other risks

Warning!
We must state emphatically that all machines produce other risks. Use maximum caution during every operation. Working safely is in your hands!

Even when you follow all safety regulations and use the machine in accordance with the instructions, there will still be potential risks. These are the following:

- Death or serious injury caused by flying materials. The grapple has an extremely powerful closing force, which means that objects held between the blades may burst. Take account of this and lift the object up without using the blades if possible. Keep everyone at a safe distance in connection with flying materials.
- Death or serious injury due to unforeseen circumstances. It is impossible to anticipate all possible dangers in all possible working conditions in this manual. Work with care and keep your safety and that of others in mind. Create a safe place and ensure that the workplace is as uncluttered as possible. E.g. ensure that Electricity, gas and water are cut off when demolition work is carried out.

5.4 Safety features on the machine

(This chapter only applies to the rotating sorting grapple)

Warning!
Safety features may not be changed, removed or deactivated.

Attention!
Users must regularly execute visual checks and check the operation of the safety features in order to prevent dangerous situations. Position A, in diagram 6, fall under this. Position B is checked annually in a professional workshop. See chapter 8, maintenance.

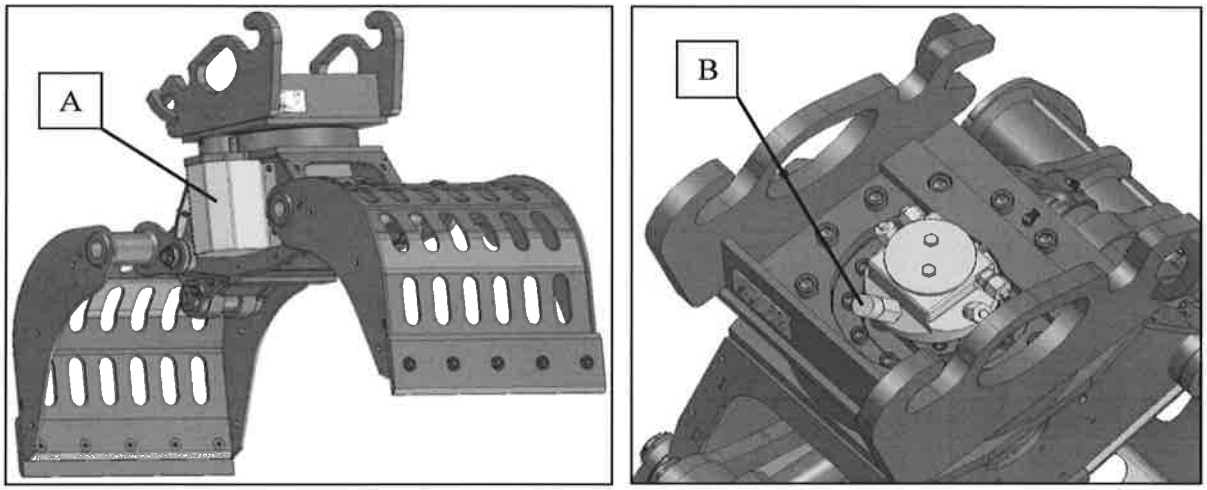

Diagram 6: Location of safety features on the machine

The compulsory safety features are illustrated in light grey in the illustration above.

Position	Description
A	Cover plate for hydromotor
B	Crossover relief valve 170bar

6 Transport

This chapter gives the instructions that must be followed when transporting the grapple. In this case, the term transport refers to the relocation of the grapple other than during the operation of an excavator.

Warning!
Only transport the sorting grapple in its completely open position, as illustrated in diagram 7.

Warning!
Only place/transport the grapple on a stable, flat and hard surface!

Warning!
When lifting the grapple use both hoisting eyes on both sides of the grapple, indicated in diagram 7, and use a hoisting strap with sufficient strength (see weight on CE plate)

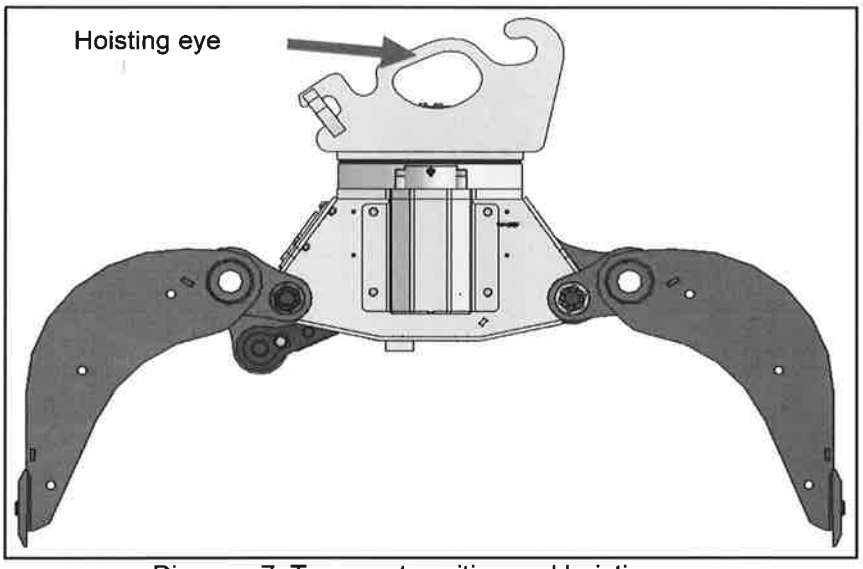

Diagram 7: Transport position and hoisting eye

7 Operation

This chapter briefly indicates points of attention for the daily practical use of the grapple. We assume that machine operators are familiar with issues such as connection to an excavator and the execution of open/close and rotation movements.

Mounting :

- connect the Grapple to the excavator with Couple section
- connect the hoses , Thick hose is for open/close function
- Test hydraulic leakage
- Adjust flow and pressure on the excavator

If there are any doubts regarding the operation, please refer to the manual of the excavator.
For mounting points on the Export adapter see the drawing on appendix 4.

Warning!

- During connection or disconnection the grapple must be on a flat and hard surface. The shells of the grapple must also be completely open.
- The grapple may only be used on a machine with the correct weight. Refer to the technical specifications in this manual or the machine class on the type plate of the machine.
- The grapple may only be used with the correct connection and the correct hydraulic hose connections.
- Check that the maximum operating pressure of the excavator is the same or less than that of the grapple. Do not exceed the maximum operating pressure indicated in this manual, chapter 2.
- The weight of the grapple, plus the weight of the material that is gripped may never exceed the maximum permitted lifting capacity and the relevant radius of action. Refer to the excavator manual for this.
- It is forbidden for people to be within the radius of operation of the machine with the grapple (working area) while it is in operation.
- Remember that the radius of operation is enlarged when gripped material protrudes.
- Remember that, for whatever reason, material can also fall out of the grapple. The grapple is also not designed for the long-term gripping of loads. For this reason, never work above people, machines, vehicles, etc., and remain outside the working area at all times.
- The grapple has an extremely strong closing force. Remember that material can be broken when squeezed, and prevent this if possible by not picking up objects with the blades. Keep everyone at a safe distance in connection with flying material.
- Always pick up a long load at the centre of gravity, otherwise the turning moment may cause the grapple to rotate and/or tip over.
- Be aware of dangers potentially caused by the objects to be lifted and the environment. E.g. ensure that electricity, gas and water are cut off when demolition work takes place.
- It is forbidden to hit or batter with the grapple.
- Always connect hydraulic hoses stress-free and prevent the tearing of hoses by keeping them away from moving parts.

The hydraulic connections are illustrated in diagram 8. The cylinder and rotation motor both have 2 connections on both sides of the grapple. In grapples without a slew bearing the cylinder connections are located directly on the cylinder and are accessible through an opening in the top of the grapple.

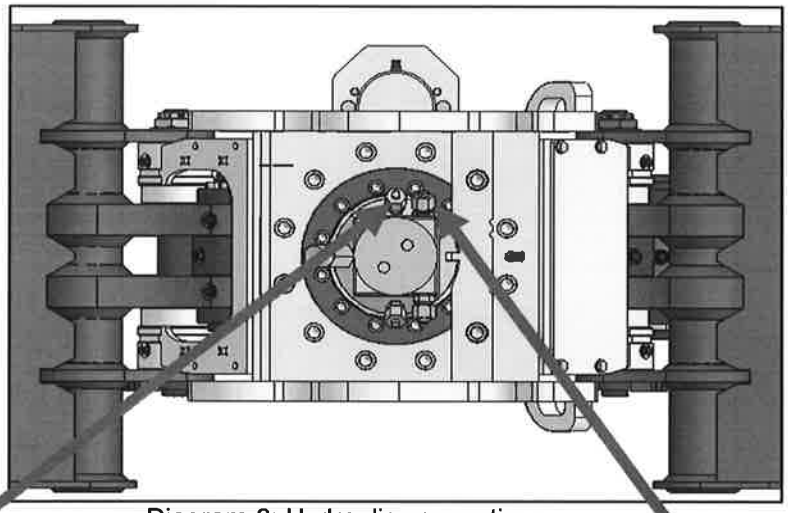

Diagram 8: Hydraulic connections

Connection of rotating motor	
Connection:	10L M16
Maximum pressure:	150bar
Maximum oil flow:	15L/min

Connection cylinder	
Connection:	12S M20
Maximum pressure:	300bar
Maximum oil flow:	40L/min

8 Cleaning, maintenance and repairs

This chapter provides instructions for maintenance work (cleaning, lubrication, checks, adjustment and repairs). Simple maintenance such as lubrication, checking bolts and optical checks may be carried out by the operator. Replacement or adjustment of parts and checking the operation of certain systems may only be carried out by expert staff with specialised knowledge in the field of mechanics, hydraulics and electronics.

Warning!
Cleaning, maintenance and repairs may only be executed when the machine is inactive. This means that the motor of the digger must be switched off and the grapple must be stable, with completely open shells, and must be placed on stable and hard surface. Also ensure that the excavator is stable and cannot move.

Warning!
Never work on the grapple (cleaning, maintenance and repairs) while the hydraulic system is still pressurised! Refer to the manual of the excavotor for the method of depressurising the hoses to the grapple.

Warning!
Only replace parts with original parts.

Warning!
Always keep hands away from moving parts!

Warning!
Clean up spilled hydraulic oil and lubricants immediately in connection with the danger of slipping

Environmental recommendations!
- Oil, grease and cleaning agents damage the environment and may therefore not be flushed away or removed with normal household waste. Handle these substances in accordance with the regulations for SMC (small chemical waste).
- Cotton polishing cloths and rags with remnants of oil, grease or cleaning agents are flammable. Collect them in a suitable, closed container and remove them in accordance with the applicable regulations for waste processing. Never throw them away with household waste!

8.1 Cleaning

Attention!
When cleaning with a high-pressure cleaner do not spray directly into vulnerable parts such as the hydraulic hoses, cylinder seals and hinges.

Attention!
Do not use aggressive cleaning agents.

8.2 Daily maintenance

Warning!
If it becomes apparent during the daily operations that various aspects are not functioning correctly, action must be taken immediately if these aspects prevent working safely.

Warning!
Have repairs that may be prompted by the following checks executed by expert staff with specialised knowledge in the field of mechanics, hydraulics and electronics.

Work to be executed	Interval
1. Lubrication of grease points	After every 8 hours of operation
2. Checking replaceable blade bolts or replacing blades	Once, after 8 hours of operation
3. Checking Universal joint bolts or fixed top frame bolts	After every 100 operating hours
4. Checking replaceable blades for excessive wear	daily
5. Checking the hydraulic system for damage and external leaks	daily
6. General visual inspection of parts	daily

Explanation point 1:
There are 11 lubrication points on the sorting grapple (9 points on a fixed grapple) that must be lubricated after every 8 hours of operation. For this, use the same grease as used for the excavator. There are 2 lubrication points on the universal joint, and the other 9 lubrication points are to the left and right of the hinges. They are all accessible from the top. When lubricating the slew bearing turn it several times slightly so the entire slew bearing is lubricated.

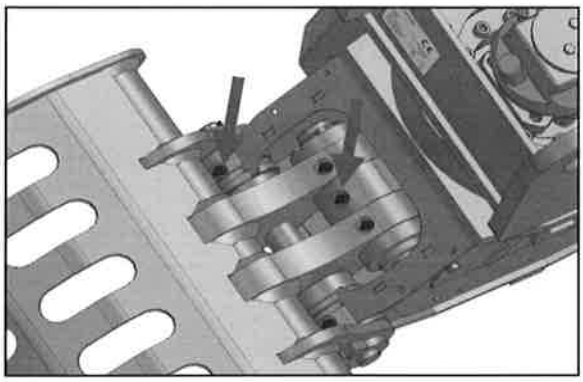
Diagram 9: Lubrication points on hinges

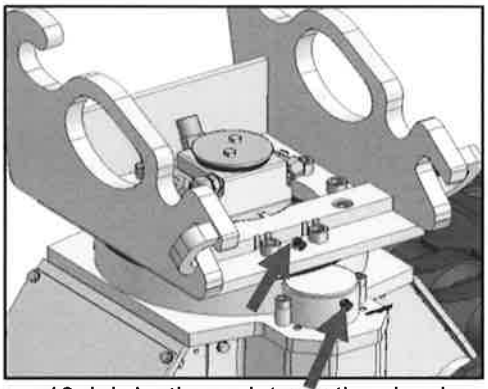
Diagram 10: lubrication points on the slew bearing

Explanation point 2:
After the first 8 hours of operation, after delivery or turning the blades (see also point 4), the bolts must be tightened with approximately 300Nm. Starting with the central bolt(s) and working outwards.

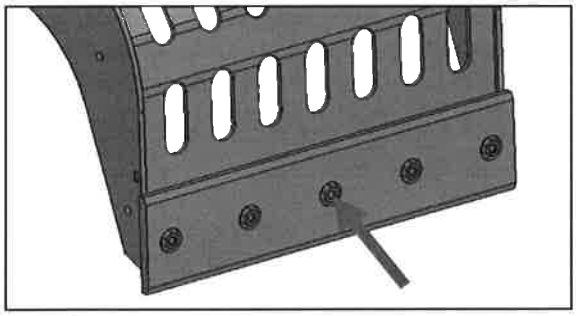
Diagram 11: Bolts replaceable blade

Explanation point 3:
After every 100 hours of operation the slew bearing bolts or fixed top frame bolts must be tightened diagonally. The slew bearing is fastened to the top frame with 12x M16 bolts, these bolts must be tightened with 330Nm. The slew bearing is mounted on the base frame with 12x M12x1,25 bolts, these must be tightened with 180Nm.
The same applies to the fixed grapple, but this has just one bolt pattern with 12x M12 bolts. Tighten these diagonally with 180Nm.

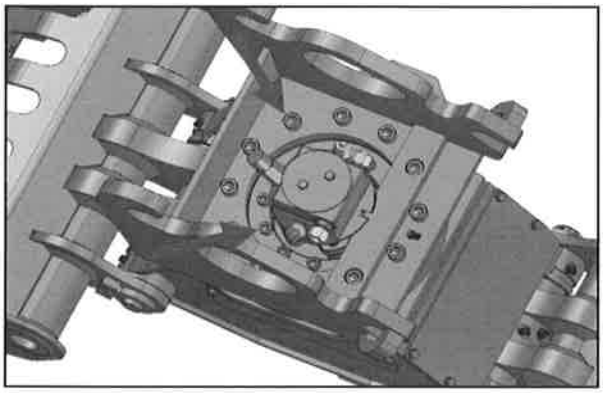
Diagram 12: Universal joint bolts

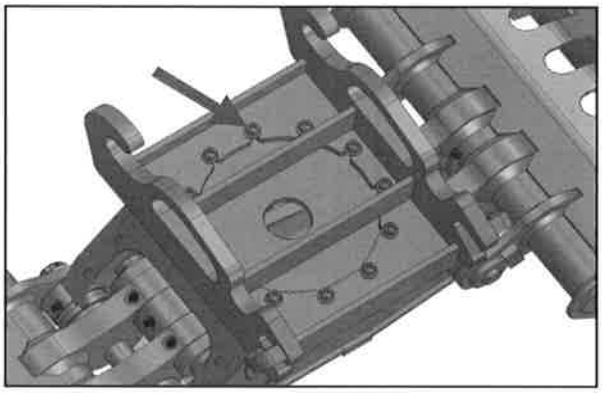
Diagram 13: Fixed top frame bolts

Explanation point 4:
Check the wear of the blades every day. When the blades on the shells have been worn to such an extent that the shells no longer close completely, work must be stopped immediately and the blades replaced/turned. This is in order to prevent unnecessary loads on the cylinder. The blades also function as the end stop of the cylinder.

After the replacement or turning of the replaceable blades, these must be welded to the shell with tack welding, first tighten the bolts to 300Nm. This is in order to be able to resist the impact loads on the blades. These tack welds are indicated in diagram 14 with red lines - three welds of approximately 6cm per blade.

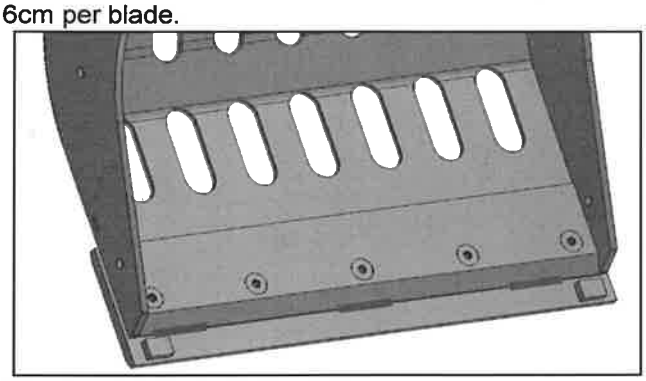
Diagram 14: Tack weld position

Explanation point 5:
Check the hoses, couplings, hydraulic cylinder and spindle every day for leaks and/or tears/damage caused by dryness. Have the grapple repaired by a service workshop if necessary.

Explanation point 6:
Check the grapple completely every day. Check for leaks, damage, looseness, tears and the absence of parts.

An extra point of attention here is that the 2 castle nuts and 2 locking plates that are at the end of the hinge pins – illustrated in diagram 15. These are secured with a steel spring pin, the locking plates are mounted with a bolt. Check that these spring pins and bolts are still present and fulfil their securing function. Also check that the castle nuts are not excessively worn or damaged, thereby preventing them from effectively fulfilling their function.

Have the grapple repaired by a service workshop if necessary.

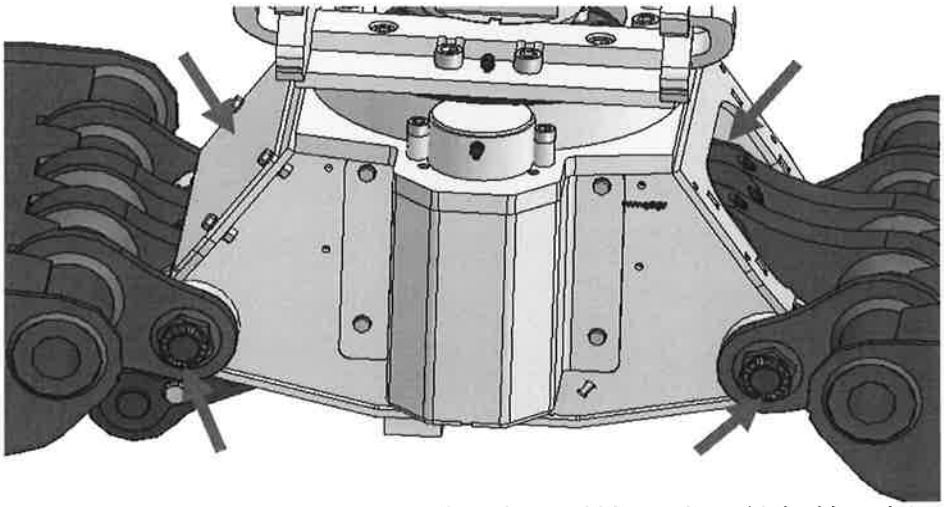

Diagram 15: Castle nuts with steel spring pins and hinge pins with locking plates.

8.3 Expert maintenance and repairs

Warning!
Expert maintenance and repairs to the machine may only be executed by expert staff with specialised knowledge in the field of mechanical engineering, hydraulics and electronics.

Warning!
Always work with the greatest caution and follow the safety instructions indicated in this manual.

Warning!
Never work on hydraulic systems when they are under pressure. When conducting maintenance on the hydraulic system, always disconnect the hydraulic hoses to the excavator. Ensure that the hoses are depressurised before disconnecting. Refer to the manual of the excavator for this.

Warning!
When executing replacements, remember that various components have a significant dead weight. Dead weights are stated in appendix 2.

Work to be executed annually by expert staff
1. All work specified in chapter 8.2 daily maintenance
2. Check the presence and operation of safety features, see chapter 5.4
Extra bi-annual work, to be executed by expert staff
1. Replace hydraulic hoses

Other points of attention, if applicable:

- Check the overpressure safety feature: the overpressure safety feature is integrated into one of the hydromotors and is set to 170bar. Check the operation of the overpressure by placing a pressure gauge in the rotation circuit. The best is to fit a pressure gauge to both rotation connections of the grapple. Applying external force to the grapple boxes can force the rotation of the grapple. The set pressure can be read when the box rotates. This may not exceed 170bar +/-10bar. Replace the motor if necessary.
- Replace hydraulics hoses with an identical hose (operating pressure, diameter, length, number of layers, flexibility). Prevent tension in the hose when fitting. Align the ends with each other and prevent twisting.
- Hydromotor bolts M12x35 12.9 must be greased and tightened with 150Nm. Fit Nordlock washers under the bolt heads.
- Axial play on the gearwheel (between hydromotor and the top plate of the bottom frame) must be between 1.5 and 2 mm. Adjust this with shims.
- Lock 2x M10x60 12.9 bolts in the connection block at the bottom of the spindle with Loctite and tighten with 75Nm.

Appendix 1: Overview drawing

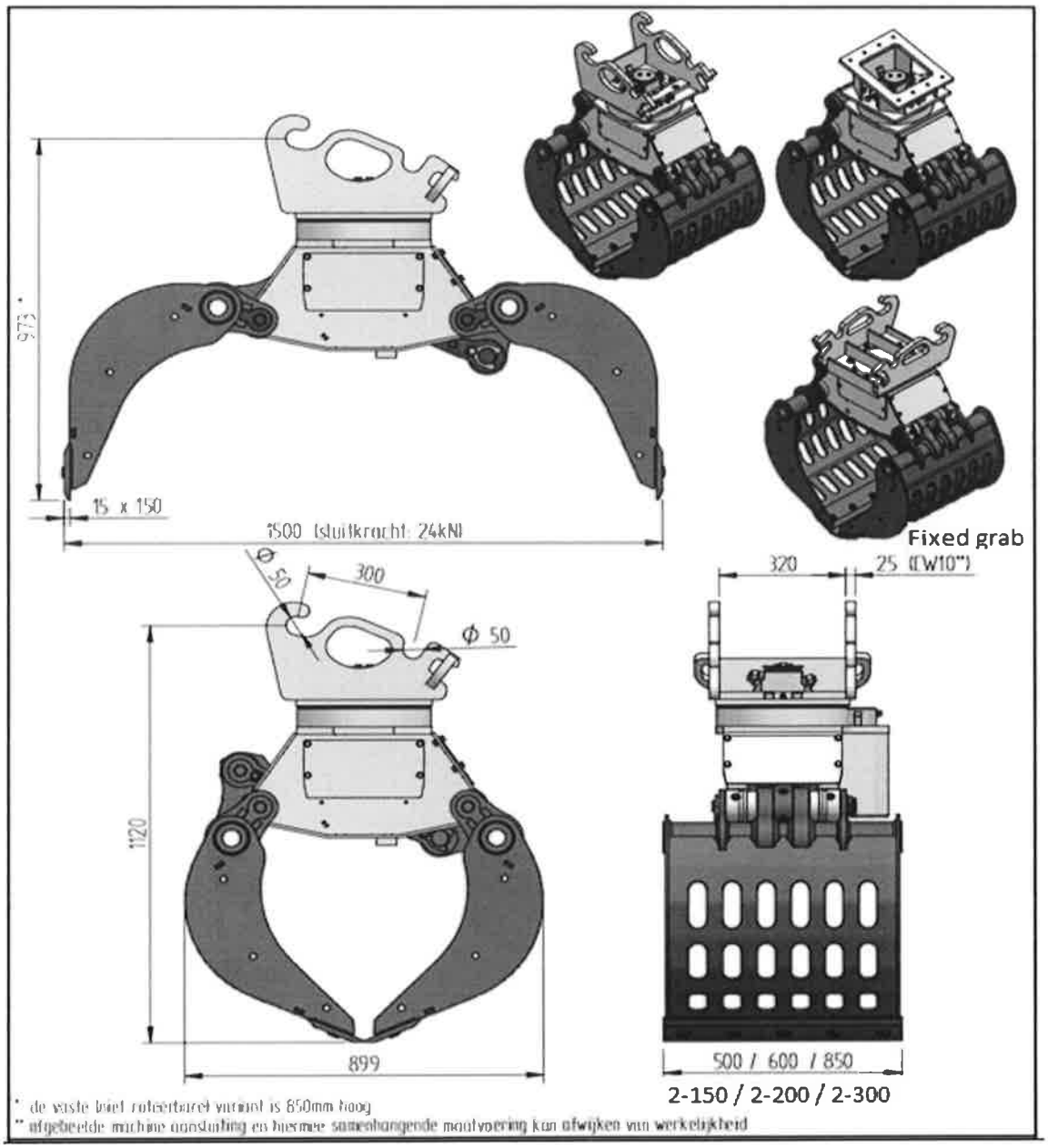

Appendix 2: Exploded view and parts list

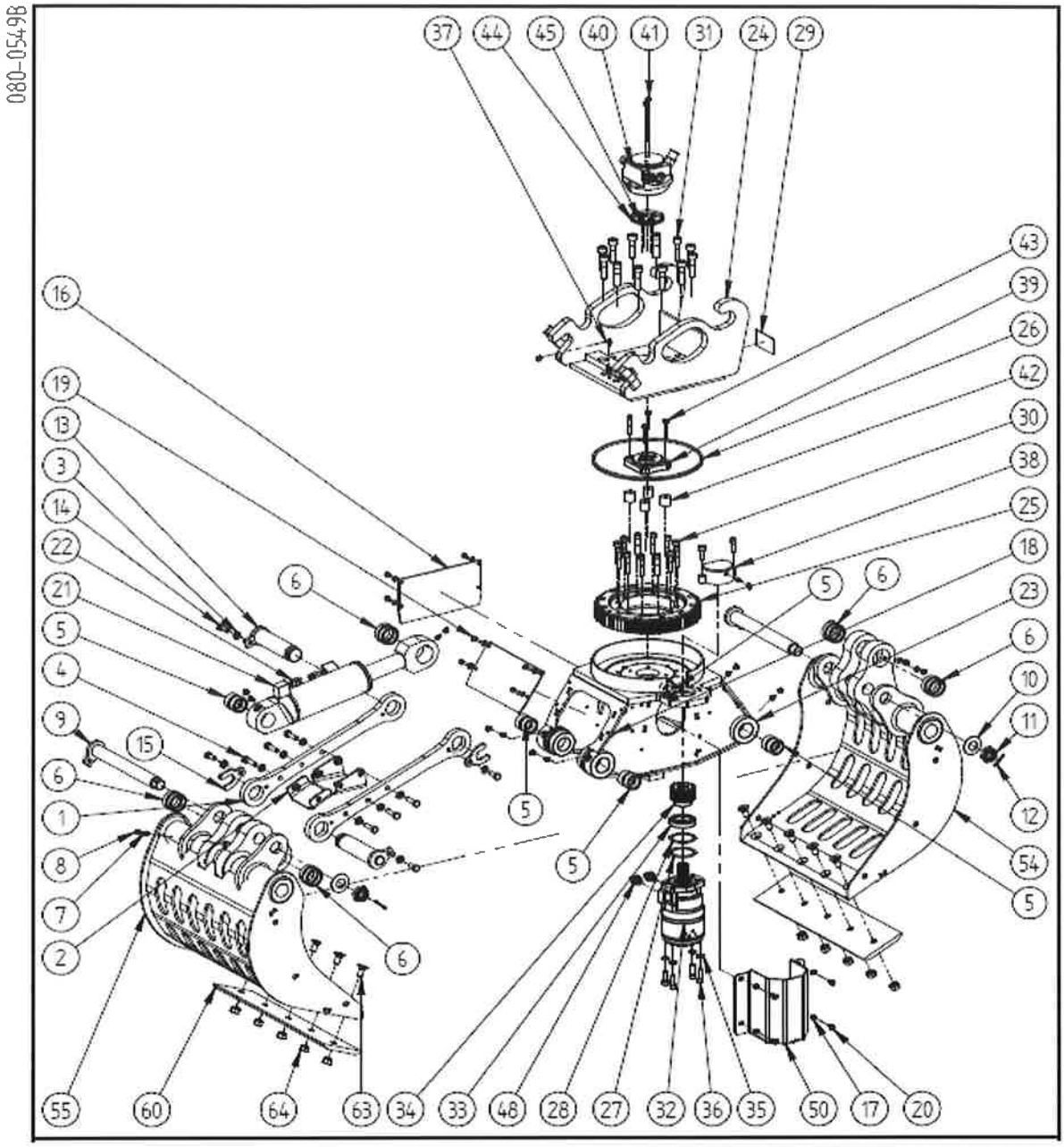

Pos.	pcs	Article	Description	weight (kg)
1	2	080-0125	Connection rod	4,5
2	1	080-0136	Protective plate	2
3	22	630-0086	Washer M12	-
4	6	600-0162	Hexagonal bolt M12x45 8.8	-
5	5	508-0084	Slide bearing	-
6	5	508-0085	Slide bearing	-
7	10	506-0095	Grease nipple M10x1	-
8	11	506-0096	Protective cap for grease nipple	-
9	2	080-0131	Hinge pin long	3,5
10	2	632-0009	Spring Washer	-
11	2	080-0139	Low castle nut M30 SW46	-
12	2	640-0114	Spring pin 6,3x50mm	-
13	2	080-0134	Hinge pin short	3
14	4	600-0149	Hexagonal bolt M12x30	-
15	2	080-0138	Locking plate, hinge pin	-
16	3	080-0246	Cover plate	2
17	20	630-0011	Washer M8	-
18	4	620-0038	Nut M8 8	-
19	4	600-0167	Hexagonal bolt M8x25 8.8	-
20	12	600-0161	Hexagonal bolt M8x16 8.8	-
21	1	310-0030	Cylinder D90mm	20,5**
22	2	312-0150	Screw-in coupling 10 HL 3/8	-
23	1	080-0080	Subframe	56
24	1	080-0090	Top frame rotating grapple	43,5
25	1	236-0009	Slew bearing	17,5
26	1	509-0046	V-ring type L, NBR, asD=310-335	-
27		961-0058	shim 1mm thick, round 81	-
28		961-0059	shim 0,5mm thick, round 81	-
29	1	505-0180/505-0247	Type plate CE sorting grapple	-
30	12	610-0129	Hexagonal socket screw M12x1,25x60 12.9	-
31	12	610-0103	Hexagonal socket screw M16x65 12.9	-
32	1	313-0017	Hydromotor	15**
33	1	508-0065	Ball bearing with seal, DxdxL=80x50x16,NTN 6010LLU	-
34	1	080-0064	Gearwheel	1
35	4	633-0004	Nordlock washer set for bolt M12	-
36	18	610-0089	Hexagonal socket screw M12x35 12.9	-
37	1	506-0121	Grease nipple 90gr M10x1	-
38	1	080-0141	Cover plate gearwheel	-
39	1	080-0097	Mounting plate	2
40	1	312-0318	Hydraulic swivel joint RSG2	4,5**
41	2	600-0044	Hexagonal bolt M8x130 10.9	-

42	4	080-0088	Bush hydraulic swivel joint	-
43	4	610-0109	Hexagonal socket screw M8x55 12.9	-
44	1	509-0049	V-ring type A, as D=88-93	-
45	4	509-0047	O-ring NBR70 11,00X2,50	-
46*	1	316-0150	Hydraulic hose HD 210, L282mm, 2x union nut M18	-
47*	1	316-0151	Hydraulic hose HD 210, L440mm, 2x union nut M18	-
48	2	312-0374	Screw-in coupling, leiding 10mm, 1/2", 315bar	-
49*	2	316-0149	Hydraulic hose HD206,L210mm,2x union nut M14 recht	-
50	1	080-0145	Cover plate hydromotor	5
51*	1	080-0247	Subframe fixed grapple	50
52*	1	080-0249	Top frame fixed grapple	37
53*	2	312-0321	Blanking nut, for pipe 10mm M18x1,5	-
54	1	080-0130	Bucket 1, width 500mm	66,5
55	1	080-0099	Bucket 2, width 500mm	66,5
56*	1	080-0100	Bucket 1, width 600mm	74
57*	1	080-0120	Bucket 2, width 600mm	74
58*	1	080-0150	Bucket 1, width 850mm	92,5
59*	1	080-0151	Bucket 2, width 850mm	93
60	2	080-0126	***Replacable blade, bucket 500mm	7,5
61*	2	080-0106	*** Replacable blade, bucket 600mm	9
62*	2	080-0127	*** Replacable blade, bucket 850mm	13
63	****	610-0102	Countersunk bolt M16x35 10.9	-
64	****	620-0096	Squeezed nut M16 klasse 10	-
65*	2	312-0148	Screw-in coupling G1/4-M14	-
66*	2	312-0150	Screw-in coupling 10 HL G3/8-M18	-

* Not illustrated in exploded view
** Excluding oil
*** Type blade depends on the box width
**** Depending on the box width

Refer to the diagrams for the connection of the hydraulic parts.

Appendix 3: Hydraulics diagram

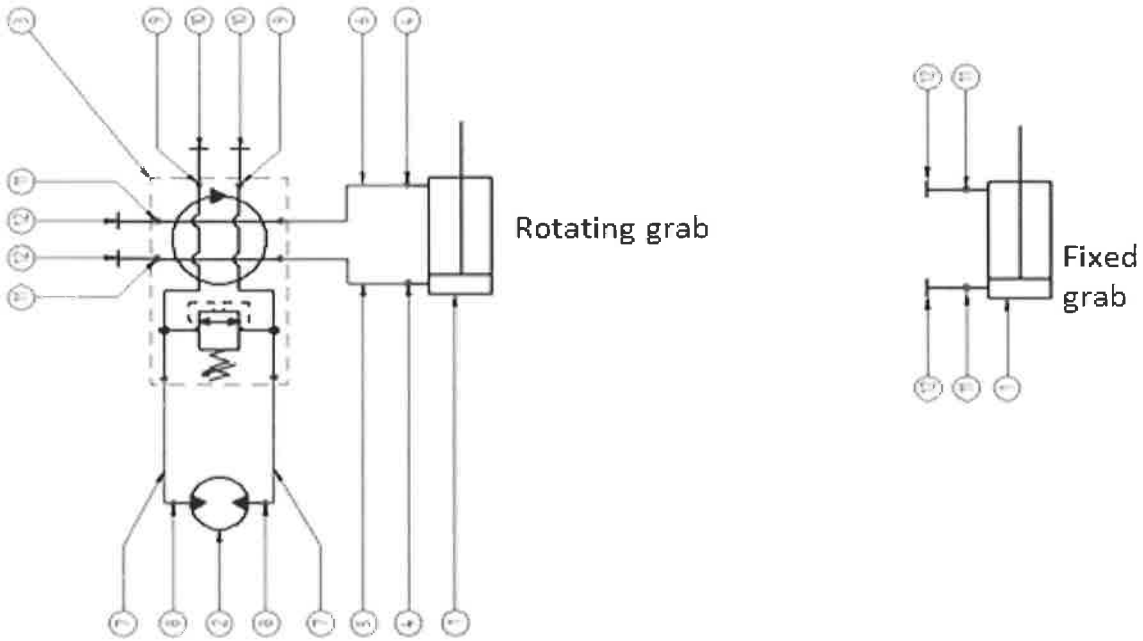

Pos.	Pcs	Article	Description	Remarkt
1	1	310-0030	Double acting hydraulic cylinder D90mm	
2	1	313-0017	Hydromotor	
3	1	313-0017	Hydraulic swivel joint RSG2	
4	2	312-0150	Screw-in coupling pipe 10mm, M18 3/8", 315bar	
5	1	316-0101	Hydraulic hose, L=282mm, 1x union nut M18x1,5 straigt, 1x outside M18x1,5	
6	1	316-0102	Hydraulic hose, L=440mm, 1x union nut M18x1,5 straigt, 1x outside M18x1,5	
7	2	316-0100	Hydraulic hose, L=250mm, 1x union nut M16 straight, 1x outside M14	
8	2	312-0292	Screw-in coupling, pipe 10mm, M16x1,5G, ½", 400bar	
9	2	312-0187	Screw-in coupling, pipe 10mm, M16x1,5G, ¼", 400bar	
10	2	312-0329	Breeche with union nut, pipe 10mm, M16x1,5	
11	2	312-0320	Screw-in coupling, pipe 12mm, M20x1,5G 3/8", 400bar	
12	2	312-0295	Breeche with union nut, pipe 12mm, M20x1,5G	
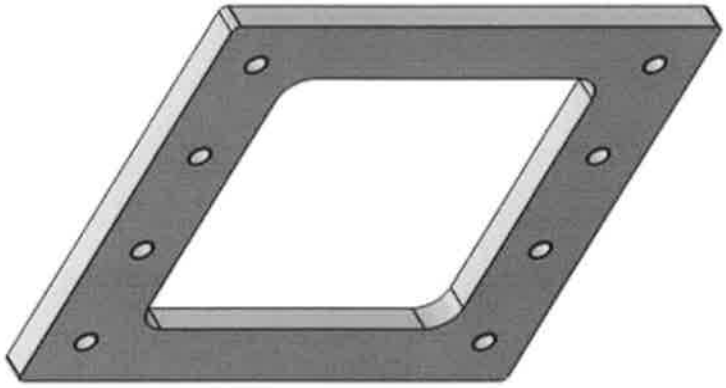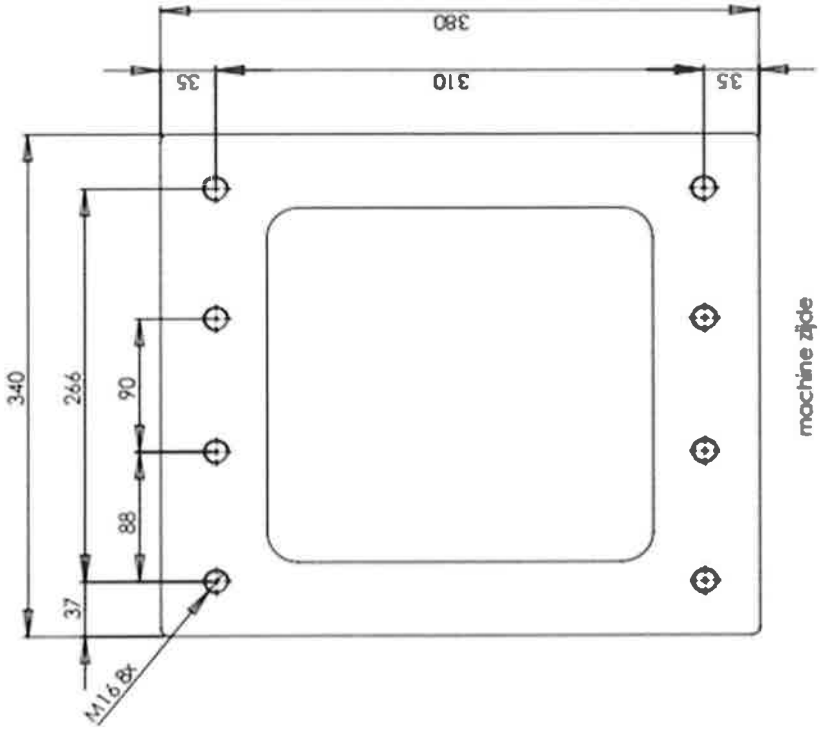
Appendix 4: Upper plate Export adapter