duma rent

www.duma-rent.com

MAEDA Mini Cranes

Max Lifting Height 16.7m

Working Radius 16.1m

Capacity 6.0t x 2.6m

Weight 14400kg

CC1485

CC1485

The CC1485 model boasts many market-leading features including a massive 6 ton lifting capacity, 16.3m boom, rear view camera and 7" monitor as standard. No outriggers mean an extremely slim working footprint. In addition this environmentally-friendly machine is equipped with an EU Stage 3B compliant engine making it up to 40% more fuel efficient.

The new Fly Jib attachment sees a move towards a more traditional wrap-around system which is much more user-friendly and easier to operate.

- 6 Ton Max capacity
- 16.7m Max Working Height 22m with optional Fly Jib
- 2000kg Pick & Carry Duty
- Minimal Tail Swing
- Fully enclosed air-conditioned cab with link slide door
- 7 inch TFT Multi Monitor
- Powerful two speed winch with hydraulic disc brake
- Hydrostatic transmission
- 4 fall/2 fall hook block
- Tilt sensor/alarm
- Automatic heptagonal 5-section boom
- Data Logger
- 2 Year Warranty

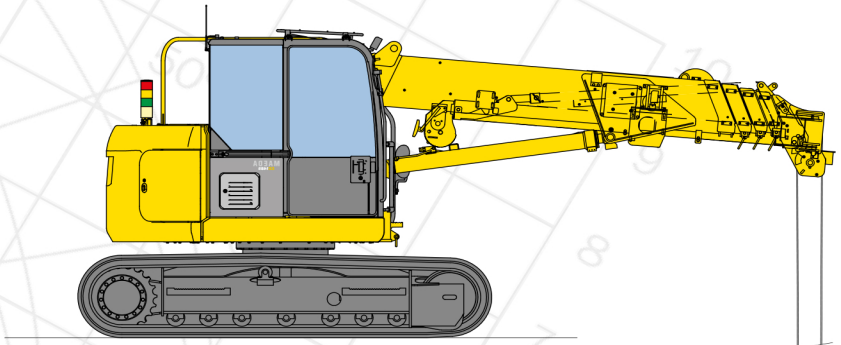

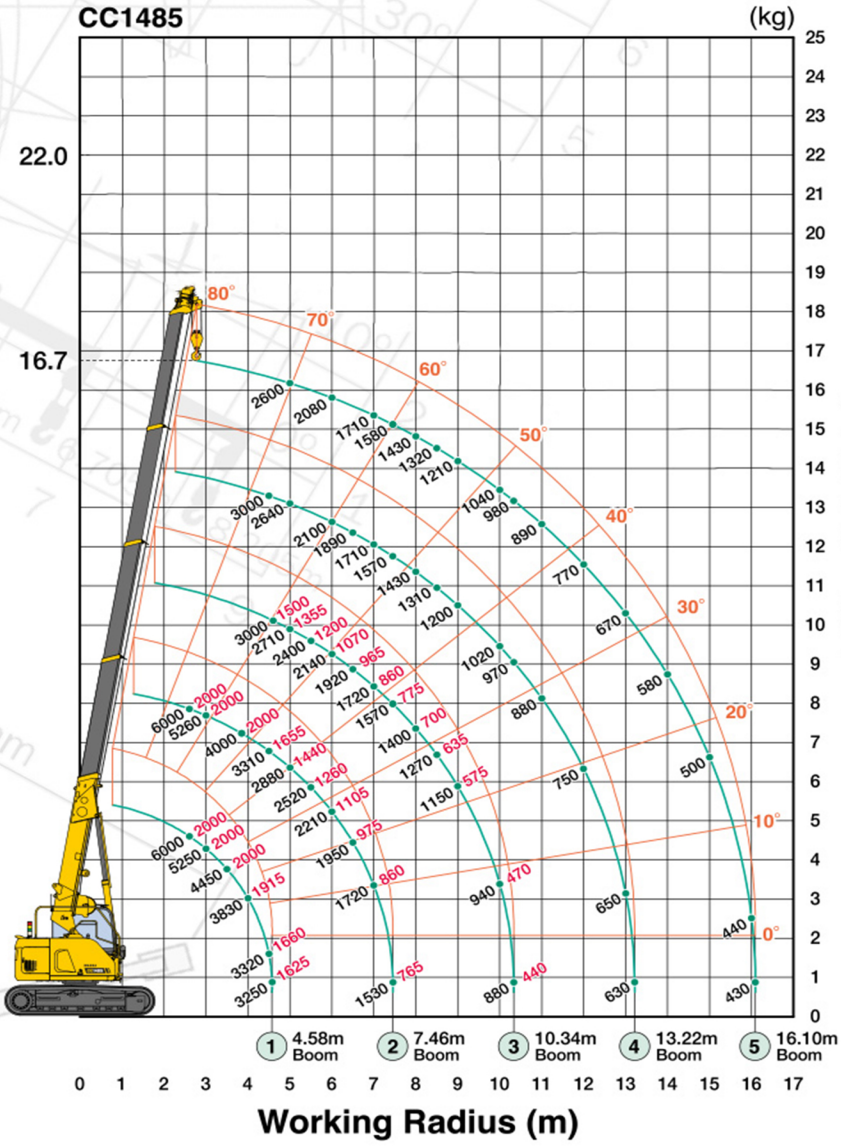

This working range chart shows total rated load including boom and jib deflection.

... consider the possibilities

Total rated load

4.745m boom		7.625m boom		10.505m boom		13.385m boom		16.265m boom	
Working radius (m)	Total rated load(kg)	Working radius (m)	Total rated load(kg)	Working radius (m)	Total rated load(kg)	Working radius (m)	Total rated load(kg)	Working radius (m)	Total rated load(kg)
2	6000	2	6000	2	3000	2	N/A	2	N/A
2.5	6000	2.5	6000	2.5	3000	2.5	3000	2.5	N/A
2.6	6000	2.6	6000	2.6	3000	2.6	3000	2.6	N/A
3	5250	3	5260	3	3000	3	3000	3	2600
3.2	4910	3.2	4920	3.2	3000	3.2	3000	3.2	2600
3.5	4450	3.5	4460	3.5	3000	3.5	3000	3.5	2600
3.85	4000	3.85	4000	3.85	3000	3.85	3000	3.85	2600
4	3830	4	3820	4	3000	4	3000	4	2600
4.5	3320	4.5	3310	4.5	3000	4.5	3000	4.5	2600
		5	2880	5	2710	5	2640	5	2600
		6	2210	6	2140	6	2100	6	2080
		7	1720	7	1720	7	1710	7	1710
				7.5	1550	7.5	1560	7.5	1560
				8	1400	8	1430	8	1430
				9	1150	9	1200	9	1210
				10	940	10	1020	10	1040
						11	880	11	890
						12	750	12	770
						13	650	13	670
								14	580
								15	500
								16	440
								16.1	430

- The Total Rated Load Chart is based on the actual working radius including boom deflection. The weight of the hook block (standard 4 fall/2 fall -90kg) must be included as part of the load shown in the Total Rated Load Chart.
- When using two fall or single fall hooks,use the appropriate four fall Total Rated Load Chart above but with a maximum load of : Two fall-3000kg, Single fall-1500kg.

Pick & Carry Duties

4.745m boom		7.625m boom		10.505m boom	
Working radius (m)	Total rated load(kg)	Working radius (m)	Total rated load(kg)	Working radius (m)	Total rated load(kg)
2	2000	2	2000	2	1500
2.5	2000	2.5	2000	2.5	1500
2.6	2000	2.6	2000	2.6	1500
3	2000	3	2000	3	1500
3.2	2000	3.2	2000	3.2	1500
3.5	2000	3.5	2000	3.5	1500
3.85	2000	3.85	2000	3.85	1500
4	1915	4	1910	4	1500
4.5	1660	4.5	1655	4.5	1500
		5	1440	5	1355
		6	1105	6	1070
		7	860	7	860
				7.5	775
				8	700
				9	575
				10	470

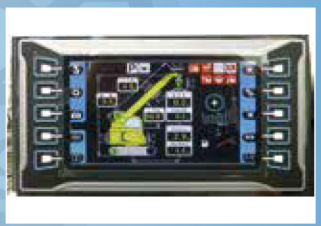

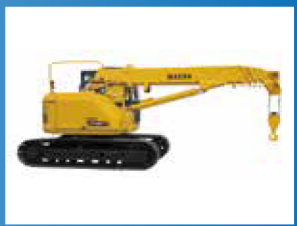

Dimensions

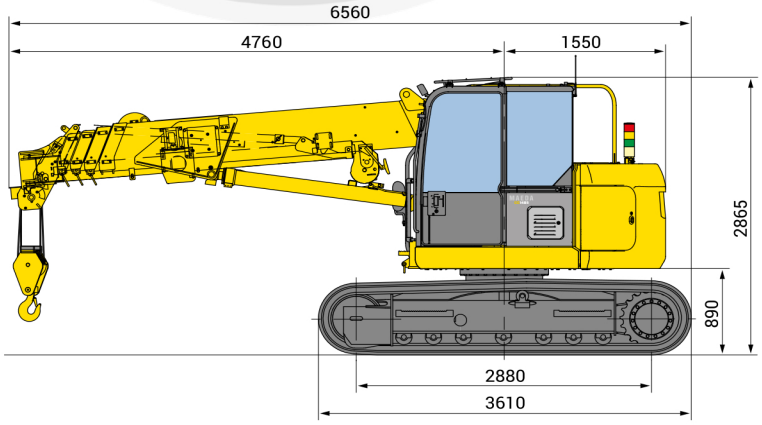

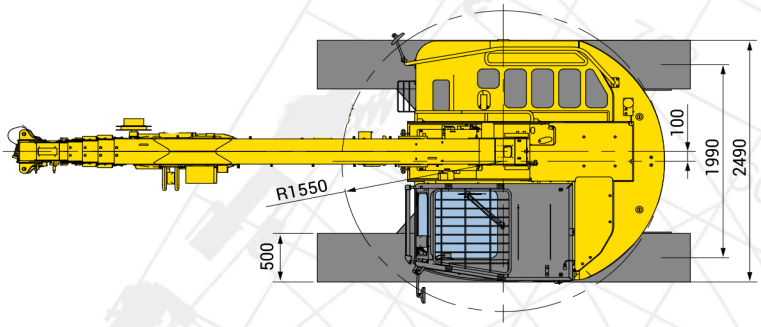

CC1485

Specifications

Capacity	Maximum	6.0 t x 2.6m
Working radius	Maximum	16.1m x 430kg
Lifting height	Maximum	16.7m x 2600 kg (22m x 820kg with Fly-Jib)
Dimensions	CC1485	6560mm x 2490mm x 2865mm
Weight	CC1485 Hook block weight	14400kg (14700kg with Fly-Jib) 90kg
Hook speed	Maximum	32/46 m/min. (4 falls, 4th layer)
Single line speed	Maximum	112/164 m/min. (4th layer)
Hoist rope	Standard	IWRC 6xFi (29) Ø 10mm x 115m
Telescopic system	Boom length Telescoping speed Boom type	4.745 m - 16.265 m 11.52 m / 33 sec Fully automatic 5 section heptagonal telescopic boom
Boom hoist system	Hoist angle / speed	-4° to 80° / 19 sec
Slew system	Slew angle / speed	360° continuous / 1.9 rpm
Drive	Type	Independent steering controls, hydraulic piston motor with built-in automatic brake, planet reduction gears, sprocket and crawler.
Traction speed	Low High Gradability Ground length x width Ground pressure	0 – 1.9 km/h 0 – 3.2 km/h 20° 2880mm x 500mm (Track dimensions) 0.49 kgf / cm² 0.51 kgf / cm² (with Fly-Jib)
Engine	Model Type Rated output Starting method Fuel tank capacity	ISUZU 4LE2XDPC 4 cylinder diesel, water cooled, direct injection 40.3kW / 2000 rpm Electric Diesel/140L
Safe load indicator	Made specifically for Maeda Mini Cranes with a fully programmable working envelope	
Standard equipment	Moment limiter, steel tracks, overwind protection, hydraulic safety valves, level, EMO switch, LED working status lamp, working light, hour meter, tilt alarm, air conditioning, 4-fall / 2-fall hook block, safety lock lever, rear view camera, data logger.	